MOBILE LAB UNITS

4111, 4121, 4222, 4332, 4342, & 4352 SERIES (OAK OR MAPLE)
ASSEMBLY INSTRUCTIONS

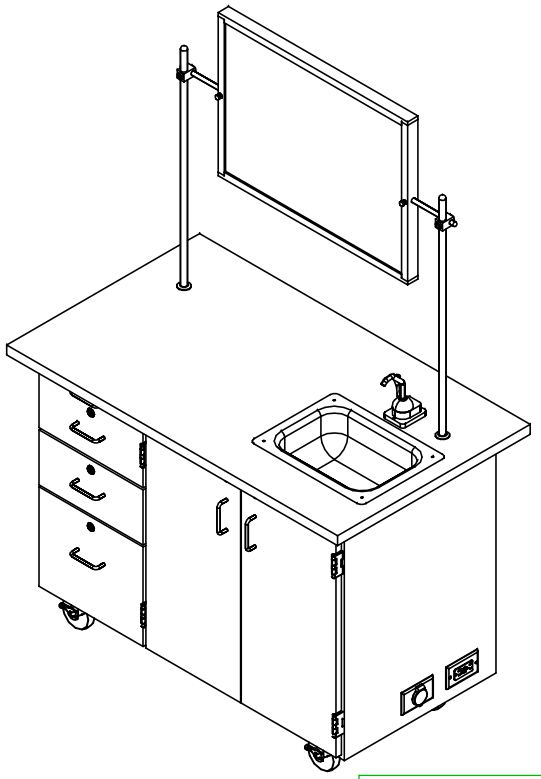

NOTE:

1. MODEL VIEWS MAY NOT REPRESENT EXACT MODEL PURCHASED

REV.	DESCRIPTION	DATE	NAME	ECN NO.
A	CREATED ASSEMBLY INSTRUCTIONS	1/29/18	EMK	-
REVISION LEVEL				

ALL DIMENSIONS ARE IN INCHES UNLESS NOTED OTHERWISE	DWN BY: EMK	DATE DWN:	1/29/18
CABINET SQUARENESS = ± .0625 FRACTIONAL VALUES = ± 1/32" - ALL VALUES ± OVERALL -	APR BY:	DATE APR:	
	APR BY:	DATE APR:	

CONFIDENTIAL:
ALL DESIGN RIGHTS RESERVED
THE INFORMATION, DATA, DESIGN, AND DRAWINGS EMBODIED IN THIS DOCUMENT AND ALL REPRODUCTIONS THEREOF ARE THE EXCLUSIVE PROPERTY OF DIVERSIFIED WOODCRAFTS, INC.

THESE DOCUMENTS ARE SUPPLIED WITH THE UNDERSTANDING THAT THEY WILL NOT BE DISCLOSED TO THIRD PARTIES WITHOUT WRITTEN CONSENT OF DIVERSIFIED WOODCRAFTS, INC. ANY REPRODUCTION IN PART OR WHOLE WITHOUT WRITTEN CONSENT IS SUBJECT TO LEGAL ACTION.

TITLE:
MOBILE LAB UNITS
ASSEMBLY INSTRUCTIONS

DRAWING NUMBER:	SCALE:	SHEET:	REVISION:
MOBILE LAB UNITS	NTS	1 OF 9	REV A

TOOLS REQUIRED
½" WRENCH
ADJUSTABLE PLIERS
SCREW DRIVER

ASSEMBLY COMPONENTS

ITEMS INCLUDED	PART #	PART DESCRIPTION	QTY
CASTERS	100081	CASTER,4IN SWIVEL TOP PLATE, W/BRAKE	4
CASTER HARDWARE KIT	206509	CASTER,ASSY,HDWRE,16-SCREWS, 16-NUTS	1
EXTENSION CORD	100036	ELECTRICAL EXTENSION CORD	1
HAND PUMP	100013	PUMP,ROCKET HAND RP800	1
TUBING	100015	TUBING,⅜ FOR HAND PUMP	2.5
CROSS BAR	100007	ROD,CROSSBAR ½ DIA.X 40L	1
UPRIGHTS	100004	ROD,UPRIGHT ¾ DIA.X 40L	2
CLAMPS	100003	ROD CLAMP ½X¾ ASSY	2
WATER JUGS	100118	WATER JUG,2 1/2 GAL RECTANGULAR	2
GOOSE NECK FIXTURE	222830	FIXTURE,L081-55WSA GSNCK W/ FLANGE	1

NOTE:

1. COMPONENTS VARY WITH STYLE OF MOBILE CABINET PURCHASED.
2. **XX** INDICATES ITEMS THAT MAY NOT COME WITH UNIT (DEPENDING ON MODEL PURCHASED).

REV.	DESCRIPTION	DATE	NAME	ECN NO.
A	CREATED ASSEMBLY INSTRUCTIONS	1/29/18	EMK	-

REVISION LEVEL

ALL DIMENSIONS ARE IN INCHES UNLESS NOTED OTHERWISE

CABINET SQUARENESS = ± .0625
FRACTIONAL VALUES = ± 1/32"
- ALL VALUES ± OVERALL -

DWN BY:	EMK	DATE DWN:	1/29/18
APR BY:		DATE APR:	
APR BY:		DATE APR:	

CONFIDENTIAL:
ALL DESIGN RIGHTS RESERVED
THE INFORMATION, DATA, DESIGN, AND DRAWINGS EMBODIED IN THIS DOCUMENT AND ALL REPRODUCTIONS THEREOF ARE THE EXCLUSIVE PROPERTY OF DIVERSIFIED WOODCRAFTS, INC.

THESE DOCUMENTS ARE SUPPLIED WITH THE UNDERSTANDING THAT THEY WILL NOT BE DISCLOSED TO THIRD PARTIES WITHOUT WRITTEN CONSENT OF DIVERSIFIED WOODCRAFTS, INC. ANY REPRODUCTION IN PART OR WHOLE WITHOUT WRITTEN CONSENT IS SUBJECT TO LEGAL ACTION.

TITLE:
MOBILE LAB UNITS
TOOLS AND ASSEMBLY COMPONENTS

DRAWING NUMBER:	SCALE:	SHEET:	REVISION:
MOBILE LAB UNITS	NTS	2 OF 9	REV A

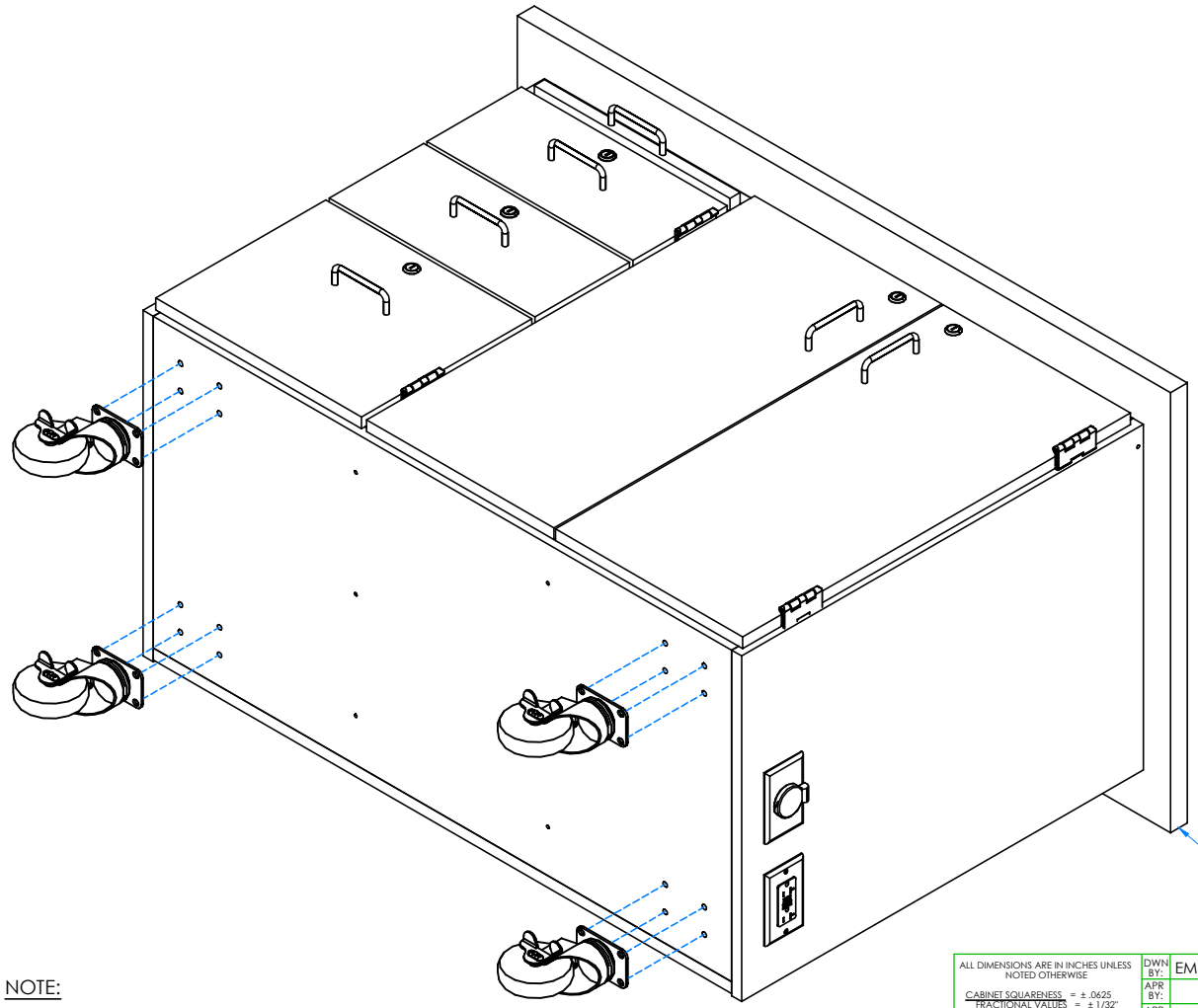

STEP 1:

- LAY CABINET ON ITS BACK.
- ATTACH CASTERS FROM INSIDE OF CABINET USING HARDWARE PROVIDED.
- IF YOUR CABINET DOES NOT HAVE A HAND PUMP, WATER FIXTURE, OR UPRIGHTS AND A CROSSBAR, SKIP TO STEP 6.

NOTE
BE SURE CABINET IS ON A CLEAN SURFACE TO PREVENT DAMAGE

NOTE:

1.

REV.	DESCRIPTION	DATE	NAME	ECN NO.
A	CREATED ASSEMBLY INSTRUCTIONS	1/29/18	EMK	-

REVISION LEVEL

ALL DIMENSIONS ARE IN INCHES UNLESS NOTED OTHERWISE	DWN BY:	EMK	DATE DWN: 1/29/18
CABINET SQUARENESS = ± .0625 FRACTIONAL VALUES = ± 1/32" - ALL VALUES ± OVERALL -	APR BY:		DATE APR:
	APR BY:		DATE APR:

CONFIDENTIAL:
ALL DESIGN RIGHTS RESERVED
THE INFORMATION, DATA, DESIGN, AND DRAWINGS EMBODIED IN THIS DOCUMENT AND ALL REPRODUCTIONS THEREOF ARE THE EXCLUSIVE PROPERTY OF DIVERSIFIED WOODCRAFTS, INC.

THESE DOCUMENTS ARE SUPPLIED WITH THE UNDERSTANDING THAT THEY WILL NOT BE DISCLOSED TO THIRD PARTIES WITHOUT WRITTEN CONSENT OF DIVERSIFIED WOODCRAFTS, INC. ANY REPRODUCTION IN PART OR WHOLE WITHOUT WRITTEN CONSENT IS SUBJECT TO LEGAL ACTION.

TITLE:
MOBILE LAB UNITS
ASSEMBLY INSTRUCTIONS

DRAWING NUMBER:	SCALE:	SHEET:	REVISION:
MOBILE LAB UNITS	NTS	3 OF 9	REV A

STEP 2:

- ATTACH HAND PUMP OR WATER FIXTURE TO PILOT HOLES LOCATED ON TOP WITH HARDWARE PROVIDED.
- ATTACH ONE END OF THE ⅜" TUBING TO THE PUMP OR WATER FIXTURE AND INSERT OTHER END INTO FRESH WATER CONTAINER (NOT SHOWN).
- REMOVE SINK STOPPER FROM BOTTOM OF PLASTIC SINK DRAIN HOSE AND PUT INTO THE SINK DRAIN.
- INSERT END OF THE HOSE INTO WASTE WATER CONTAINER (NOT SHOWN).

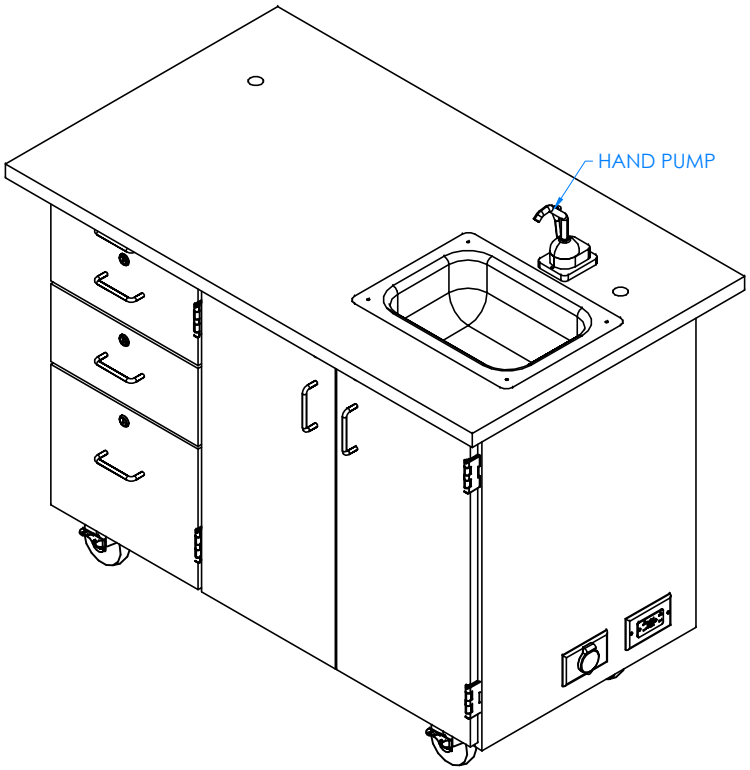

4332 UNIT SHOWN WITH HAND PUMP

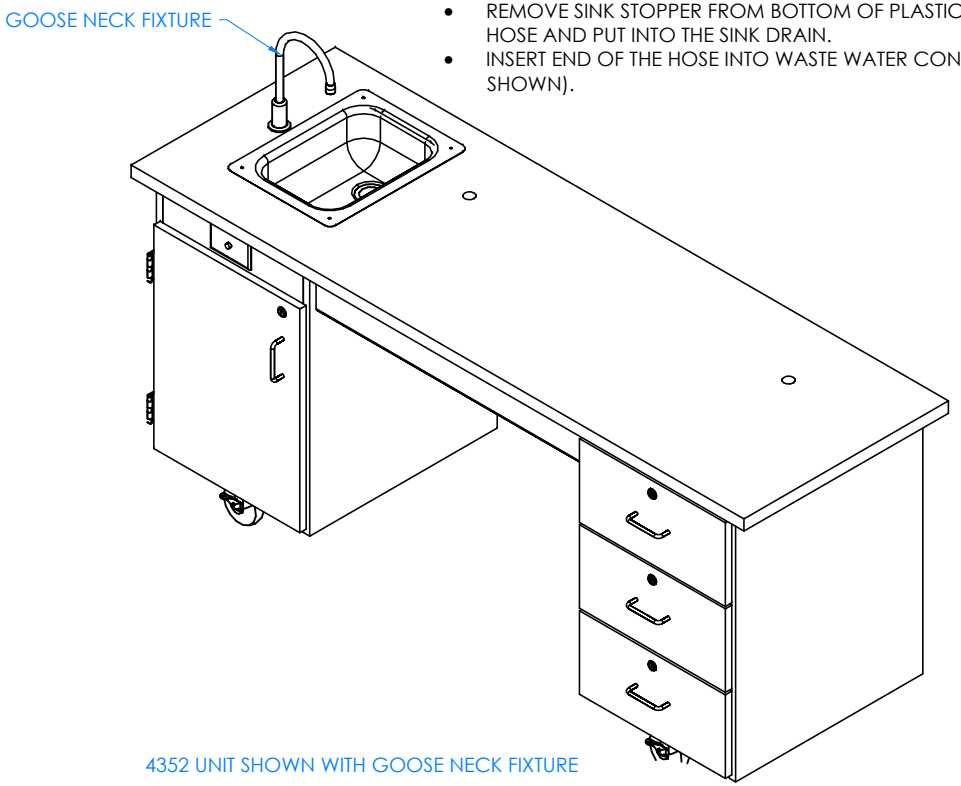

4352 UNIT SHOWN WITH GOOSE NECK FIXTURE

NOTE:

1.

REV.	DESCRIPTION	DATE	NAME	ECN NO.
A	CREATED ASSEMBLY INSTRUCTIONS	1/29/18	EMK	-

REVISION LEVEL

ALL DIMENSIONS ARE IN INCHES UNLESS NOTED OTHERWISE	DWN BY: EMK	DATE DWN: 1/29/18	
CABINET SQUARENESS = ± .0625 FRACTIONAL VALUES = ± 1/32" - ALL VALUES ± OVERALL -	APR BY:	DATE APR:	
	APR BY:	DATE APR:	

CONFIDENTIAL:
ALL DESIGN RIGHTS RESERVED
THE INFORMATION, DATA, DESIGN, AND DRAWINGS EMBODIED IN THIS DOCUMENT AND ALL REPRODUCTIONS THEREOF ARE THE EXCLUSIVE PROPERTY OF DIVERSIFIED WOODCRAFTS, INC.

THESE DOCUMENTS ARE SUPPLIED WITH THE UNDERSTANDING THAT THEY WILL NOT BE DISCLOSED TO THIRD PARTIES WITHOUT WRITTEN CONSENT OF DIVERSIFIED WOODCRAFTS, INC. ANY REPRODUCTION IN PART OR WHOLE WITHOUT WRITTEN CONSENT IS SUBJECT TO LEGAL ACTION.

TITLE:
MOBILE LAB UNITS
ASSEMBLY INSTRUCTIONS

DRAWING NUMBER:	SCALE:	SHEET:	REVISION:
MOBILE LAB UNITS	NTS	4 OF 9	REV A

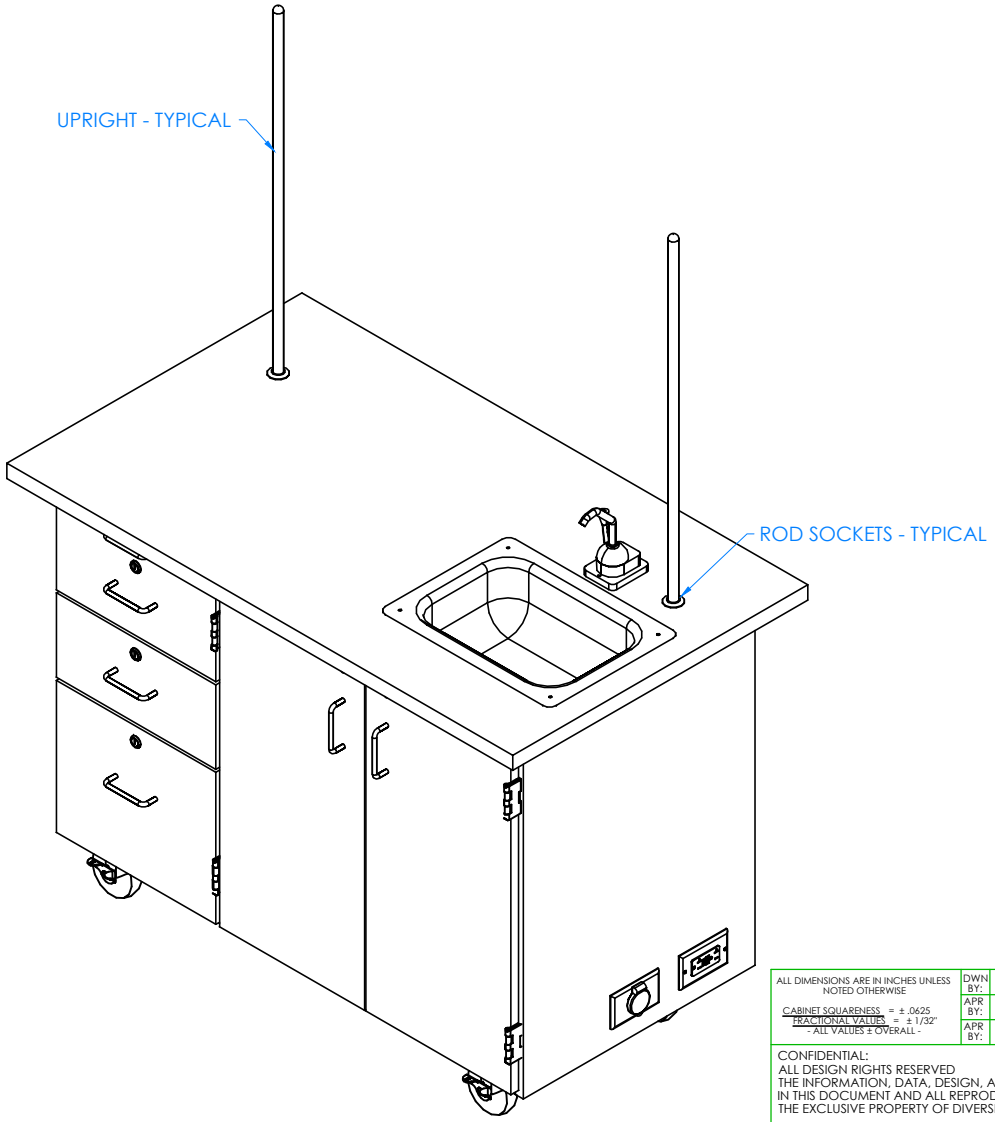

STEP 3:

- INSERT TAPERED END ON UPRIGHTS INTO ROD SOCKETS ON THE TOP.

NOTE:

1.

REV.	DESCRIPTION	DATE	NAME	ECN NO.
A	CREATED ASSEMBLY INSTRUCTIONS	1/29/18	EMK	-

REVISION LEVEL

ALL DIMENSIONS ARE IN INCHES UNLESS NOTED OTHERWISE

CABINET SQUARENESS = ± .0625
FRACTIONAL VALUES = ± 1/32"
- ALL VALUES ± OVERALL -

DWN BY:	EMK	DATE DWN:	1/29/18
APR BY:		DATE APR:	
APR BY:		DATE APR:	

CONFIDENTIAL:
ALL DESIGN RIGHTS RESERVED
THE INFORMATION, DATA, DESIGN, AND DRAWINGS EMBODIED IN THIS DOCUMENT AND ALL REPRODUCTIONS THEREOF ARE THE EXCLUSIVE PROPERTY OF DIVERSIFIED WOODCRAFTS, INC.

THESE DOCUMENTS ARE SUPPLIED WITH THE UNDERSTANDING THAT THEY WILL NOT BE DISCLOSED TO THIRD PARTIES WITHOUT WRITTEN CONSENT OF DIVERSIFIED WOODCRAFTS, INC. ANY REPRODUCTION IN PART OR WHOLE WITHOUT WRITTEN CONSENT IS SUBJECT TO LEGAL ACTION.

TITLE:
MOBILE LAB UNITS
ASSEMBLY INSTRUCTIONS

DRAWING NUMBER:	SCALE:	SHEET:	REVISION:
MOBILE LAB UNITS	NTS	5 OF 9	REV A

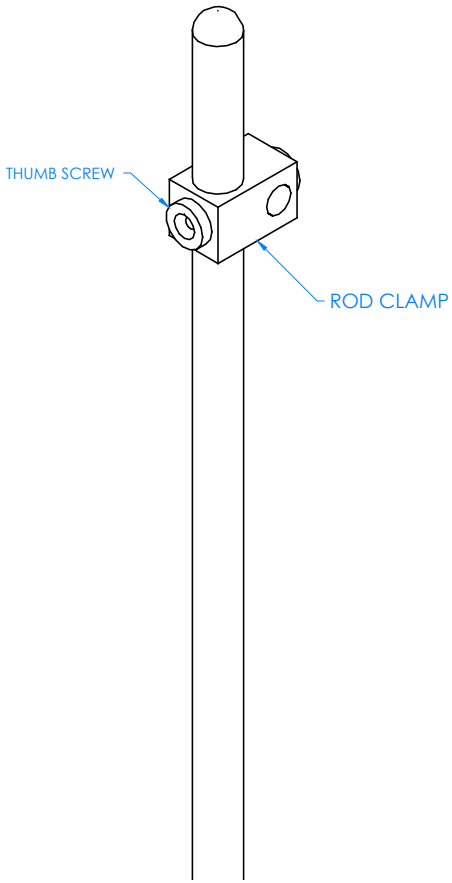

CLOSE UP OF UPRIGHT

STEP 4:

- SLIDE ROD CLAMPS OVER UPRIGHT AND TIGHTEN IN DESIRED LOCATION USING THUMB SCREWS PROVIDED ON CLAMPS.
- REPEAT ON OTHER UPRIGHT.

NOTE:

1.

REV.	DESCRIPTION	DATE	NAME	ECN NO.
A	CREATED ASSEMBLY INSTRUCTIONS	1/29/18	EMK	-

REVISION LEVEL

ALL DIMENSIONS ARE IN INCHES UNLESS NOTED OTHERWISE	DWN BY:	EMK	DATE DWN: 1/29/18
CABINET SQUARENESS = ± .0625 FRACTIONAL VALUES = ± 1/32" - ALL VALUES ± OVERALL -	APR BY:		DATE APR:
	APR BY:		DATE APR:

CONFIDENTIAL:
ALL DESIGN RIGHTS RESERVED
THE INFORMATION, DATA, DESIGN, AND DRAWINGS EMBODIED IN THIS DOCUMENT AND ALL REPRODUCTIONS THEREOF ARE THE EXCLUSIVE PROPERTY OF DIVERSIFIED WOODCRAFTS, INC.

THESE DOCUMENTS ARE SUPPLIED WITH THE UNDERSTANDING THAT THEY WILL NOT BE DISCLOSED TO THIRD PARTIES WITHOUT WRITTEN CONSENT OF DIVERSIFIED WOODCRAFTS, INC. ANY REPRODUCTION IN PART OR WHOLE WITHOUT WRITTEN CONSENT IS SUBJECT TO LEGAL ACTION.

TITLE:
MOBILE LAB UNITS
ASSEMBLY INSTRUCTIONS

DRAWING NUMBER:	SCALE:	SHEET:	REVISION:
MOBILE LAB UNITS	NTS	6 OF 9	REV A

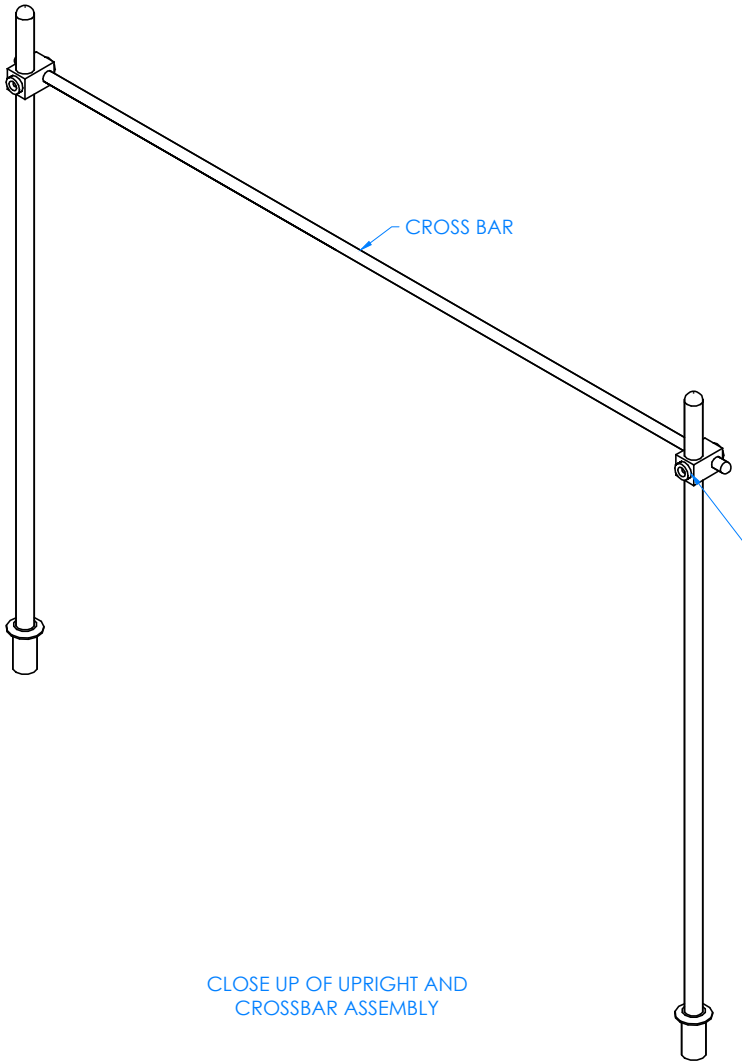

CLOSE UP OF UPRIGHT AND CROSSBAR ASSEMBLY

STEP 5:

- SLIDE CROSS BAR THROUGH ONE CLAMP.
- POSITION OTHER SIDE THROUGH THE OTHER CLAMP.
- IF YOU HAVE A MIRROR/MARKER BOARD, SEE MIRROR/MARKER BOARD ASSEMBLY INSTRUCTIONS FOR PROPER INSTALLMENT.

NOTE:

1.

REV.	DESCRIPTION	DATE	NAME	ECN NO.
A	CREATED ASSEMBLY INSTRUCTIONS	1/29/18	EMK	-

REVISION LEVEL

ALL DIMENSIONS ARE IN INCHES UNLESS NOTED OTHERWISE

CABINET SQUARENESS = ± .0625
FRACTIONAL VALUES = ± 1/32"
- ALL VALUES ± OVERALL -

DWN BY:	EMK	DATE DWN:	1/29/18
APR BY:		DATE APR:	
APR BY:		DATE APR:	

CONFIDENTIAL:
ALL DESIGN RIGHTS RESERVED
THE INFORMATION, DATA, DESIGN, AND DRAWINGS EMBODIED IN THIS DOCUMENT AND ALL REPRODUCTIONS THEREOF ARE THE EXCLUSIVE PROPERTY OF DIVERSIFIED WOODCRAFTS, INC.

THESE DOCUMENTS ARE SUPPLIED WITH THE UNDERSTANDING THAT THEY WILL NOT BE DISCLOSED TO THIRD PARTIES WITHOUT WRITTEN CONSENT OF DIVERSIFIED WOODCRAFTS, INC. ANY REPRODUCTION IN PART OR WHOLE WITHOUT WRITTEN CONSENT IS SUBJECT TO LEGAL ACTION.

TITLE:
MOBILE LAB UNITS
ASSEMBLY INSTRUCTIONS

DRAWING NUMBER:	SCALE:	SHEET:	REVISION:
MOBILE LAB UNITS	NTS	7 OF 9	REV A

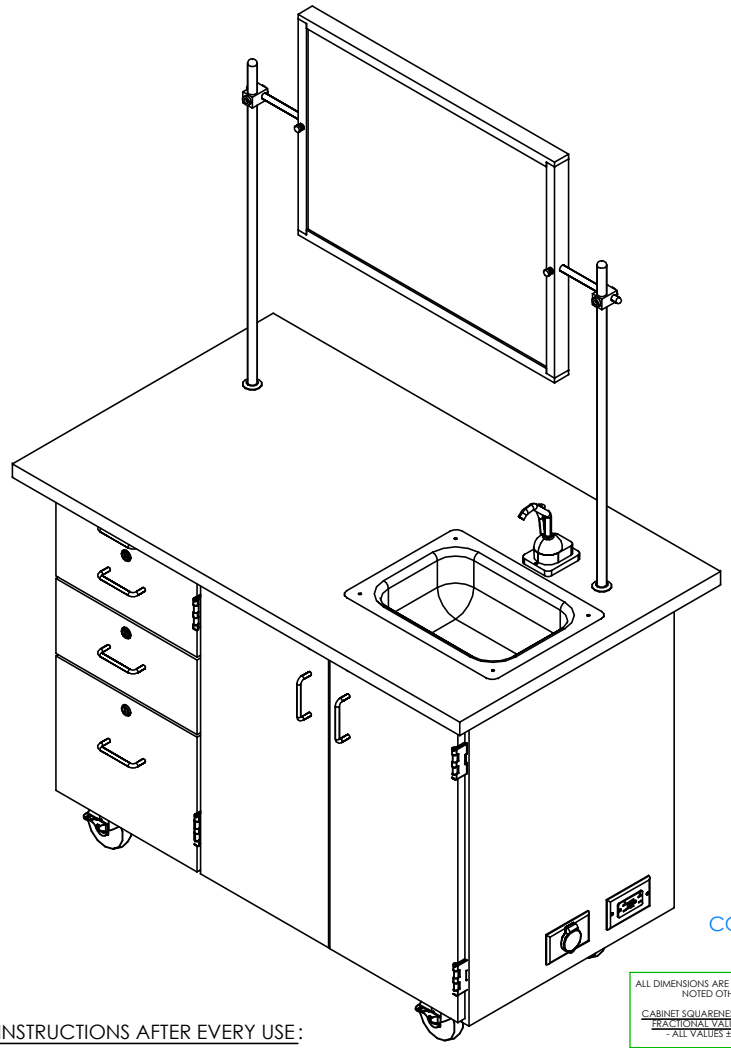

COMPLETE UNIT SHOWN

STEP 6:

- SET CABINET IN DESIRED LOCATION.

NOTE:

1. RECOMMENDED CLEANING INSTRUCTIONS AFTER EVERY USE: EMPTY CLEAN AND WASTE JUGS. RINSE WITH MILD ANTI BACTERIAL SOAP. RUN MILD ANTI BACTERIAL SOAP THROUGH WATER LINES AND HAND PUMP TO INSURE NO BACTERIAL BUILD UP.

REV.	DESCRIPTION	DATE	NAME	ECN NO.
A	CREATED ASSEMBLY INSTRUCTIONS	1/29/18	EMK	-

REVISION LEVEL

ALL DIMENSIONS ARE IN INCHES UNLESS NOTED OTHERWISE

CABINET SQUARENESS = ± .0625
FRACTIONAL VALUES = ± 1/32"
- ALL VALUES ± OVERALL -

DWN BY:	EMK	DATE DWN:	1/29/18
APR BY:		DATE APR:	
APR BY:		DATE APR:	

CONFIDENTIAL:
ALL DESIGN RIGHTS RESERVED
THE INFORMATION, DATA, DESIGN, AND DRAWINGS EMBODIED IN THIS DOCUMENT AND ALL REPRODUCTIONS THEREOF ARE THE EXCLUSIVE PROPERTY OF DIVERSIFIED WOODCRAFTS, INC.

THESE DOCUMENTS ARE SUPPLIED WITH THE UNDERSTANDING THAT THEY WILL NOT BE DISCLOSED TO THIRD PARTIES WITHOUT WRITTEN CONSENT OF DIVERSIFIED WOODCRAFTS, INC. ANY REPRODUCTION IN PART OR WHOLE WITHOUT WRITTEN CONSENT IS SUBJECT TO LEGAL ACTION.

TITLE:
MOBILE LAB UNITS
ASSEMBLY INSTRUCTIONS

DRAWING NUMBER:	SCALE:	SHEET:	REVISION:
MOBILE LAB UNITS	NTS	8 OF 9	REV A

TROUBLESHOOTING YOUR GFCI ELECTRICAL RECEPTACLE:

PLEASE NOTE: THROUGHOUT ANY OF THE FOLLOWING STEPS (PROCEDURES); IF YOU ARE NOT SURE YOU CAN DO THIS JOB SAFELY, AND COMPETENTLY, REFER THIS WORK TO QUALIFIED PROFESSIONAL!

If your unit comes equipped with a GFCI (Ground Fault Circuit Interrupter) electrical receptacle, and there is no power in the receptacle please consider/check the following:

- The extension cord (if being used) is working properly.
- The breaker hasn't been tripped, or turned off.

This type of GFCI has two testing-related buttons on it. One button is appropriately labeled "TEST", and the other button is labeled "RESET". To test the GFCI receptacle follow these steps:

- Plug in an appliance (lamp or night light) into the outlet. The light should now be on. Then press the "TEST" button on the GFCI. The GFCI "RESET" button should pop out, and the light should go out.
- If the "RESET" button pops out, but the light doesn't go out, the GFCI has been improperly wired. In this case please contact a certified professional. There may also be a problem with other wiring in the same circuit.
- If the "RESET" button doesn't pop out, the GFCI is defective, or malfunctioned, and should be replaced.
- If the GFCI is functioning properly, and the lamp goes out, press the "RESET" button to restore power to the outlet.

Conversely, if you have a GFI that has tripped (which is common) and it will not reset, you may have a wiring short in the circuit, a defective appliance on the circuit, or the GFI itself has become defective. To test a tripping GFCI follow these steps:

- Remove every appliance connected to the GFCI's circuit and reset it. If it doesn't reset there may either be a wiring fault behind a socket outlet, or your GFCI itself has become faulty.
- Make sure whatever you are plugging into to the GFCI is dry and not damaged.
- Only plug in one item at a time. If you are plugging in a defective item it will cause the GFCI to trip, and that item therefore should be replaced.

If you are still having difficulty the easiest way to troubleshoot a GFI is to obtain a GFI tester, which is available at most hardware stores. It plugs into the GFI outlet, and will supply you with a "snapshot" of your connections, indicating wiring problems and/or the condition of the GFI. Another way to troubleshoot is to simply purchase a new GFI and install it.